B02-H012 TACH/HOUR METER

APPLICATIONS

Motorcycle, ATV, Snowmobile

Tach/Hour Meter is the key to a successful maintenance program. Use on: 2 or 4 stroke gasoline engine.

Functions

Tach/Hour meter - Shows RPM's when the engine is running. When the engine is off, the meter shows total hours accumulated.

Ignition	Stroke and cylinder
1P1R = Factory set 2 Stroke	● 4 stroke 2 cylinder ● 2 stroke 1 cylinder ● 4 stroke 1 cylinder such as OHV engine)
2P1R = Factory set 4 Stroke	● 4 stroke 4 cylinder ● 2 stroke 2 cylinder

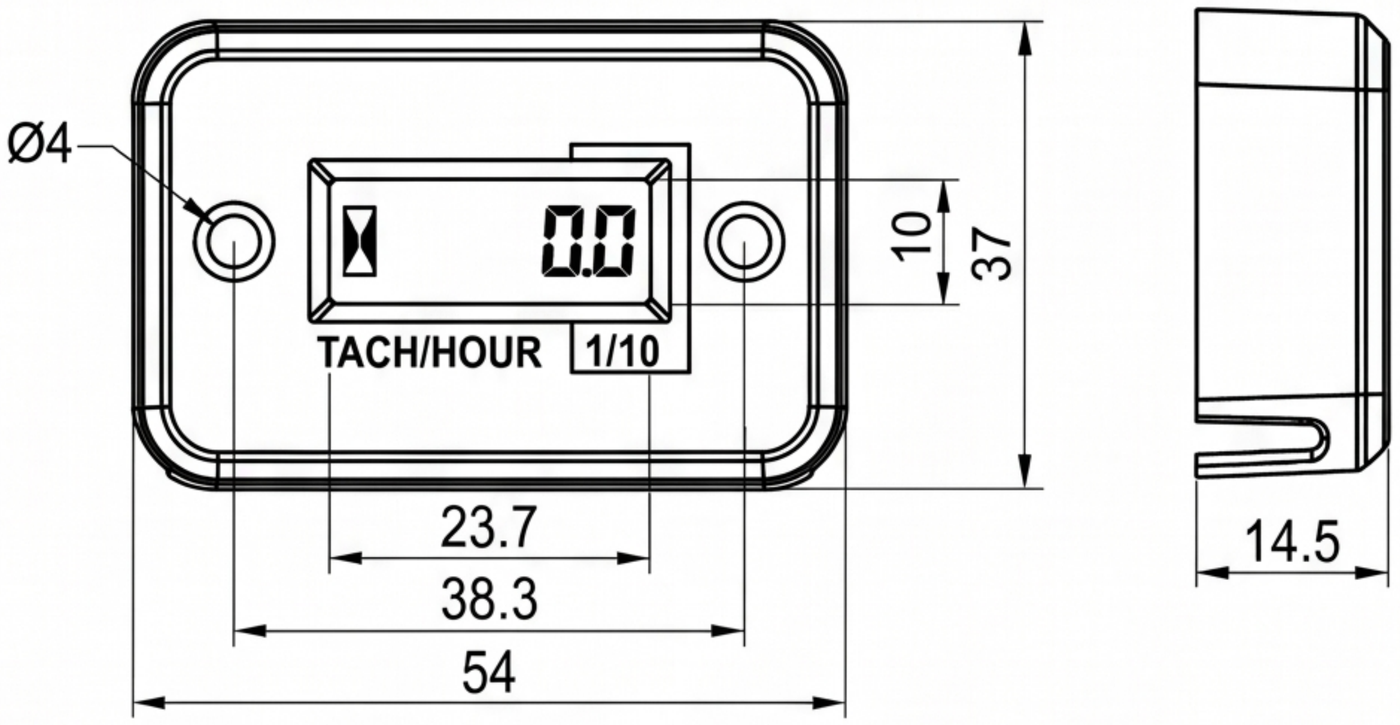

Model: B02-H012 Unit: mm

Securing Method & Installing Method

a. Drilling into your frame with Φ2.5mm socket, then secure it to the frame coming with two pick-up screws.
b. Using padded double-sided tape on the backside of the meter and secured it to the frame spar with zip ties.
c. One side of pick-up wire insert into the groove of meter, the other side wrap around on spark plug wire.

Back Side of Meter

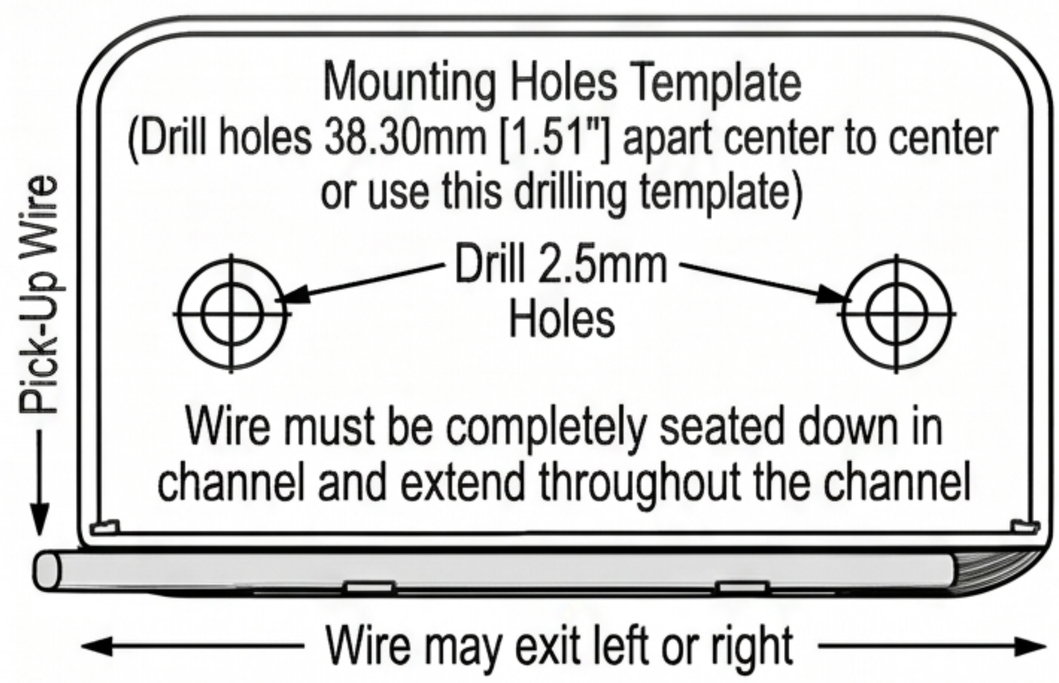

Side View of Meter

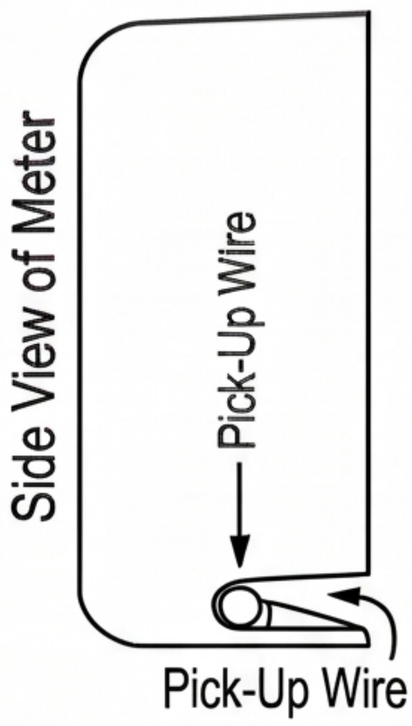

Wiring Guide

Wrap pick-up wire around spark plug wire 4 to 5 times. Secure with the supplied tie-wrap.

