RevNo	Revision note	Date	Signature	Checked
A				

NOTES:

1.Check temp °C : 20°C±5°C
2.Operating temperature : -20°C to 1300°C
3.Input temperature : 0 to 1300°C
3.Output : 0 to 52.398mV

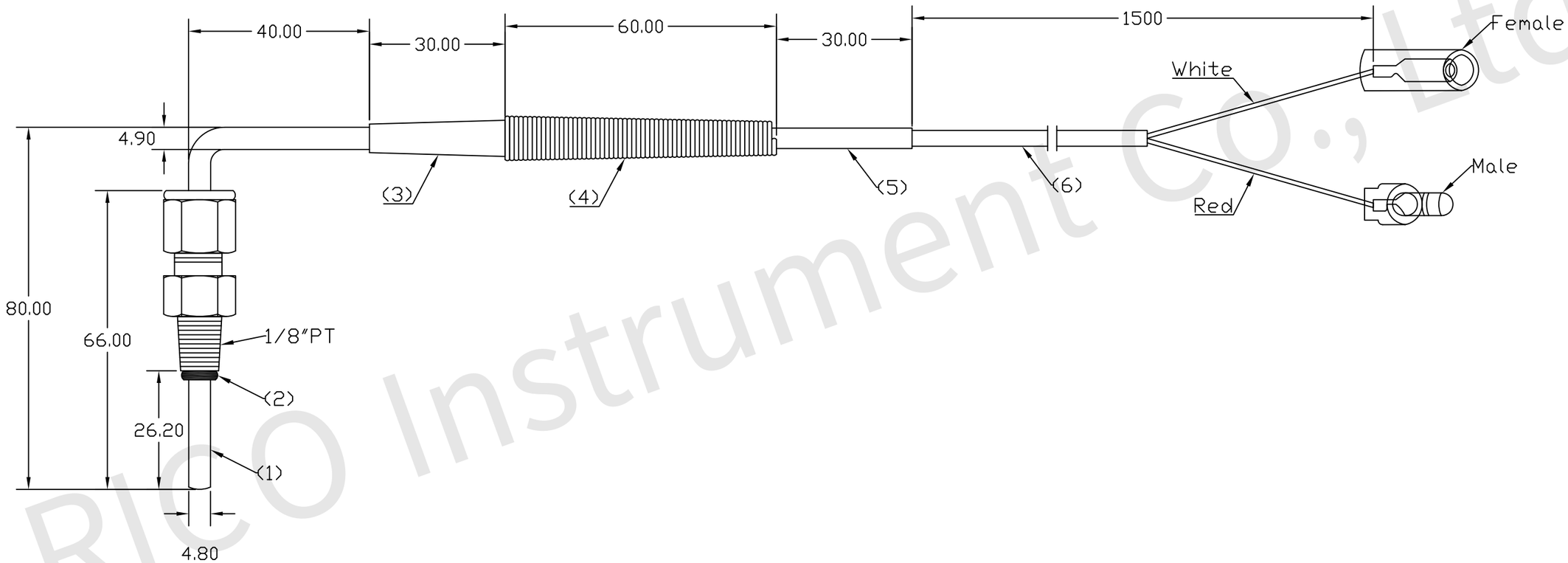

UNIT: mm

RICO Instrument Co., Ltd.

NO.	PART NAME	DESCRIPTION	COLOR	Q'TY	REMARKS
6	Line	Teflon	Silver	1	
5	Casing	PVC	White	1	
4	Cable	Stainless Steel	Silver	1	
3	Casing	Stainless Steel	Silver	1	
2	O-RING	Rubber	Black	1	
1	Housing	Stainless Steel	Silver	1	

RICO INSTRUMENT CO., LTD.

瑞克儀錶有限公司 RICO Instrument Co., Ltd.

FILE NAME	EGT-L SENSOR Datasheet.dwg	SHEET	SCALE
SIZE	1660 mm X 80mm		
DRAWN	16/11/2020		
CHECK			
APPR.	16/11/2020		
ISSUED	16/11/2020		
REV	A	DWG NO	EGT-L SENSOR - A
CONTRACT NO			