RevNo	Revision note	Date	Signature	Checked
A				

NOTES:
1.Operating voltage : 12–15V
2.Check voltage : 13.5V±0.1V
3.Check temp ℃ : 20℃±5℃
4.Operating temperature : −20℃ to 85℃
5.Power consumption : 0.5A
6.Ingress Protection Ratings (IP) : IP67
7.Display range : 0–240 km/h

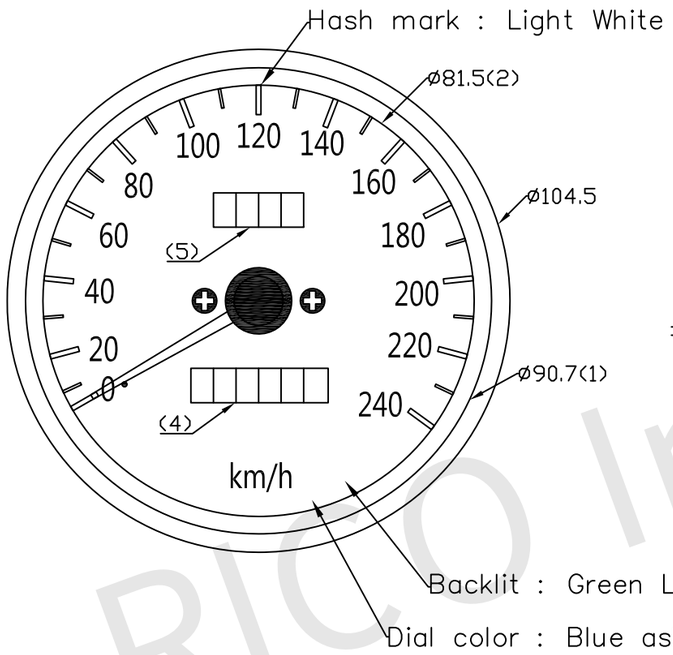

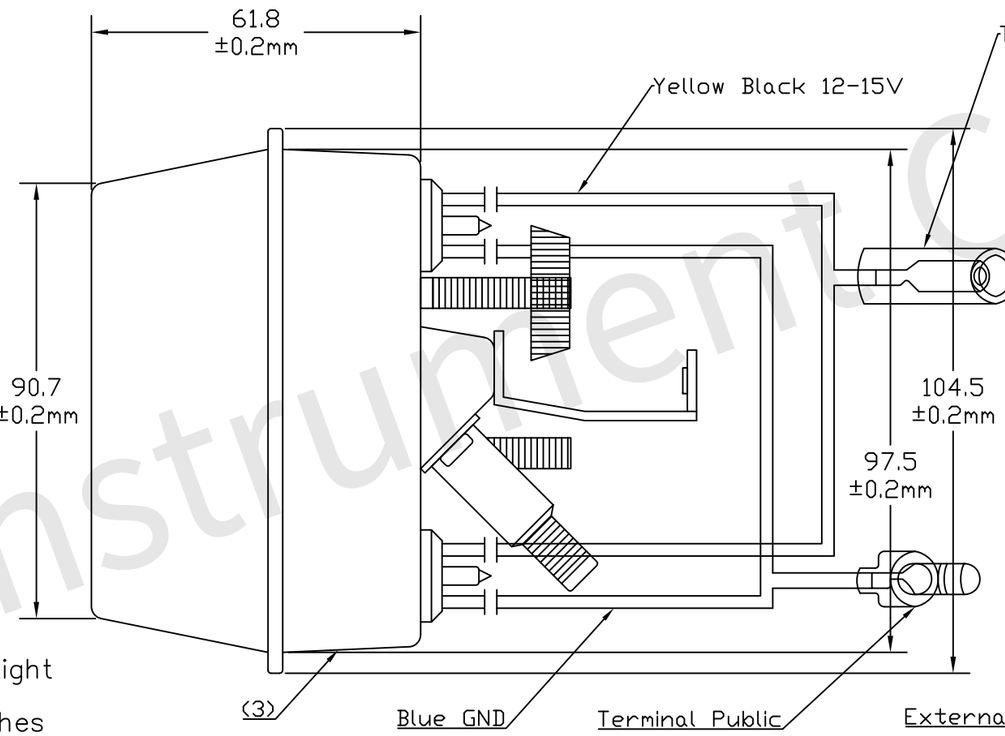

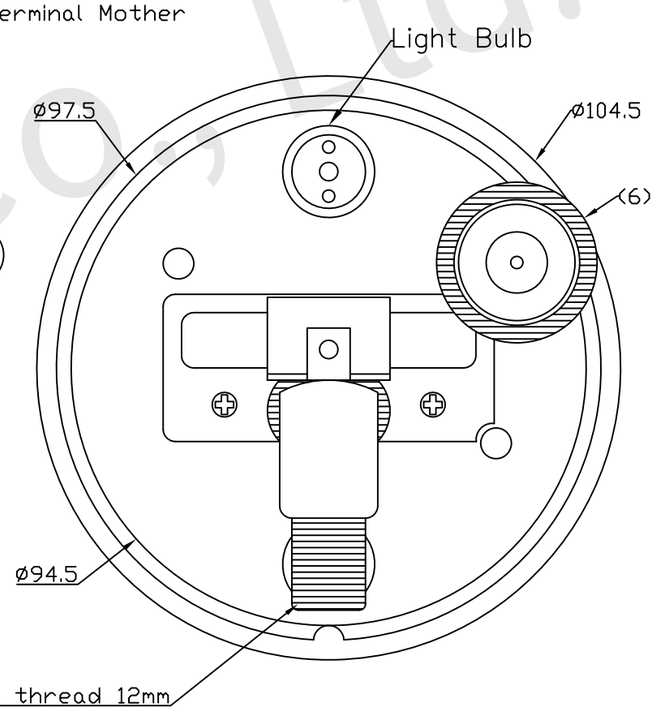

UNIT: mm

RICO Instrument Co., Ltd.

NO.	PART NAME	DESCRIPTION	COLOR	Q'TY	REMARKS
8					
7				1	
6	Select New	ABS	Black	1	TRIP Zero
5	TRIP	Number wheel		1	
4	ODO	Number wheel		1	
3	Housing	Stainless Steel 430	Silver	1	
2	Lens	Acrylic	Transparent	1	Visual Area
1	Bezel	Stainless Steel 430	Black	1	

RICO INSTRUMENT CO., LTD.

瑞克儀錶有限公司 RICO Instrument Co., Ltd.

FILE NAME	Z1 Speed Datasheet.dwg
SIZE	61.8mm X 104.5mm
DRAWN	10/11/2020
CHECK	
APPR.	10/11/2020
ISSUED	10/11/2020
REV	A
CONTRACT NO	

SHEET

SCALE

DWG NO

Z1 Speed - A